Product Sheet

AGILITY TRAIL IN ROBINIA

RO630

4-12 YEARS

2-6 PERSONS-HOURS

Product Information

Product type	Robinia playground equipment
Certification	EN-1176
Dimensions	4,4 x 1,6 x 2,0 m (length x width x height)

Technical Information

Maximum fall height	0,60 m
Security zone	36 m^2
Number of children	15

Concrete required
No surface fixation available

Materials

Type of wood: robinia
Steel wire rope
Flower-shaped protection caps
Stainless steel fixings

Product Description

Agility trail with balance rope for children aged 4 to 12. The play equipment consists of 2 plaforms that you can reach via 3 step-bollards. The floor of the platform is made of larch, the rest of the play equipment is made of robinia. The platforms are connected to one another via a balance rope made of steel cable. All nuts and bolts are completely covered by flower-shaped protection caps. This construction is fixed directly into the ground by using concrete.

EUROPLAY N.V. • EEGENE 9 • 9200 OUDEGEM-DENDERMONDE (BELGIUM)
T. +32 (0)52 22 66 22 • F. +32 (0)52 22 67 22 • sales@europlay.eu • **www.europlay.eu**

Product Sheet

AGILITY TRAIL IN ROBINIA

RO630

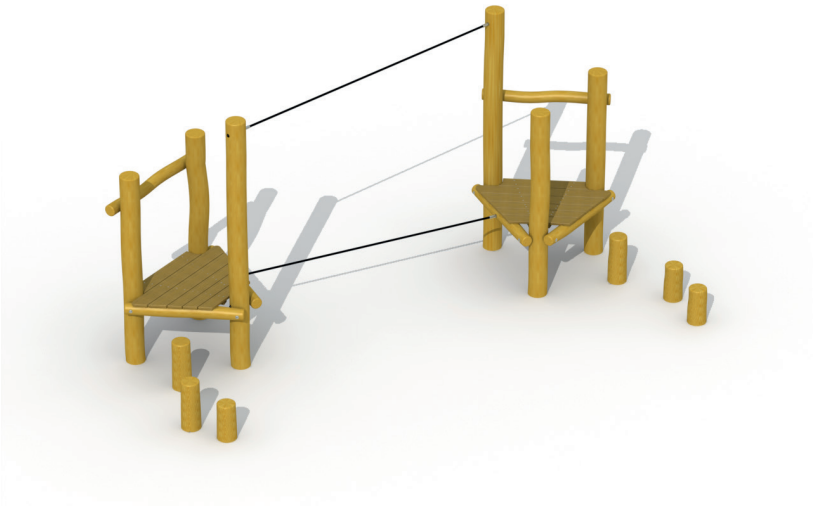

Security Zone

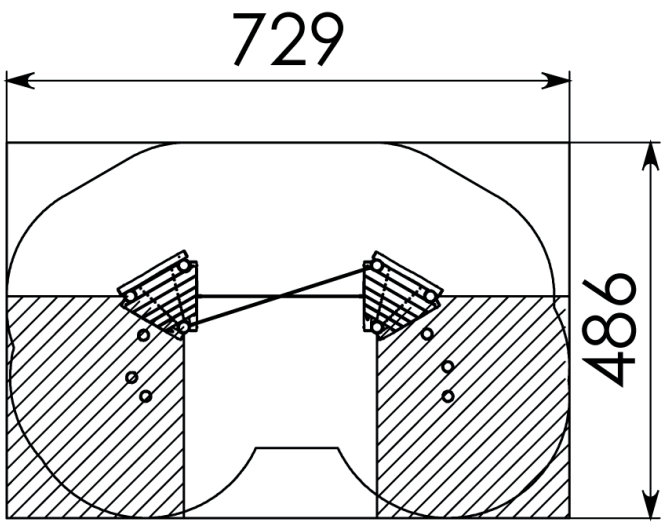

EUROPLAY N.V. • EEGENE 9 • 9200 OUDEGEM-DENDERMONDE (BELGIUM)
T. +32 (0)52 22 66 22 • F. +32 (0)52 22 67 22 • sales@europlay.eu • **www.europlay.eu**